SUPER 2 WAY 16 SIZE, 1 5/16-12 THREAD “SUPER” SERIES

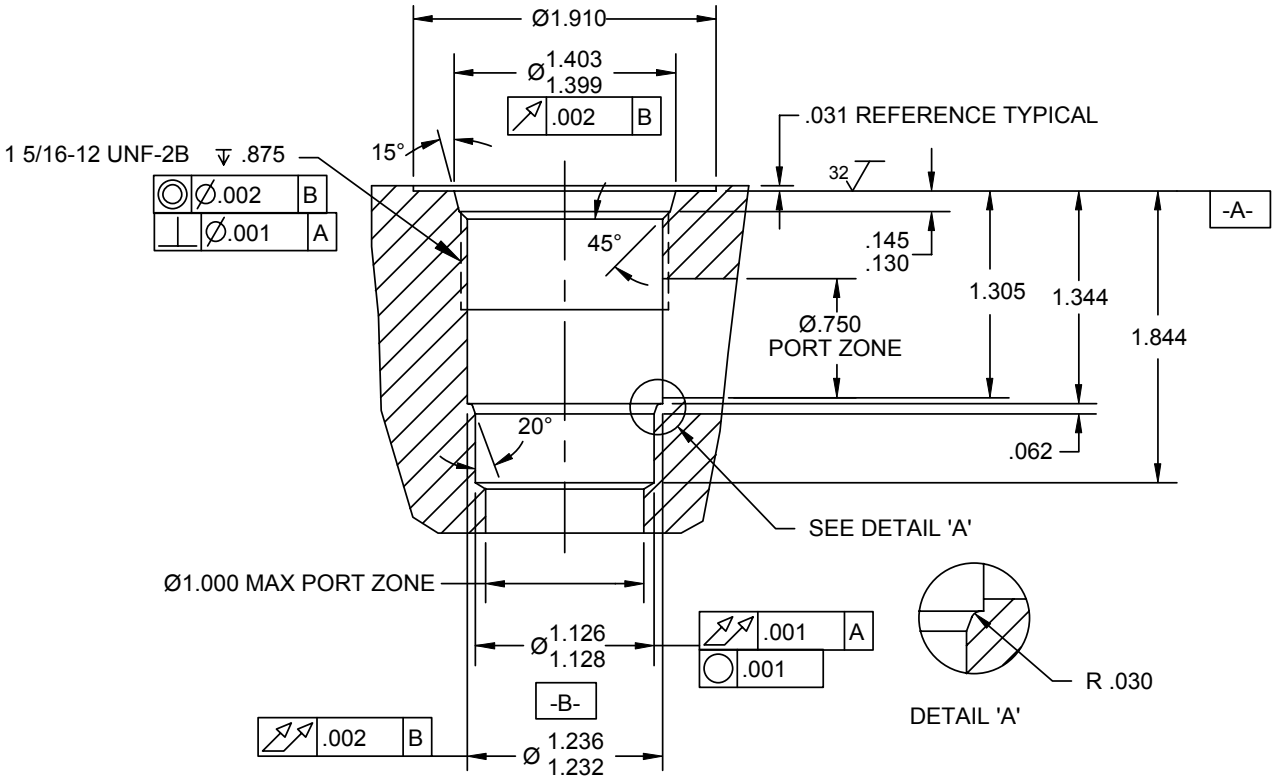

NOTES:

1. CAVITY CAN BE MACHINED WITH DELTA FORM TOOL #40500017.
2. ALL MACHINED SURFACES TO BE 32√ FINISH OR BETTER, EXCLUDING THREADS.
3. IT IS VERY IMPORTANT THAT VALVE CAVITIES MEET ALL DIMENSIONAL AND QUALITY STANDARDS OF CONCENTRICITY AND PERPENDICULARITY. THREADS MUST BE PERPENDICULAR TO THE SPOTFACE SURFACE. SPOTFACE MUST CLEAN UP TO FULL DIAMETER. IMPROPERLY MACHINED CAVITIES CAN LEAD TO CARTRIDGE MALFUNCTION AND/OR FAILURE FROM DISTORTION.

WARNING: *the specifications/application data shown in our catalogs and data sheets are intended only as a general guide for the product described (herein). Any specific application should not be undertaken without independent study, evaluation, and testing for suitability.*

Delta Power Company
4484 Boeing Drive Rockford, IL 61109 • USA • Phone +1 (815) 397-6628 • Fax +1 (815) 397-2526
mail: delta@delta-power.com • **www.delta-power.com**

TECNORD
Via Malavolti, 36 • 41122 Modena • ITALY • Phone +39 (059) 254895 • Fax +39 (059) 253512
mail: tecnord@tecnord.com • **www.tecnord.com**